Experiment 2、像差 Abberation

A. Spherical aberration

Object:

To study the longitudinal spherical aberration of a simple lens caused by the various zones of the lens.

Theory:

Remain to students.

Arrangement:

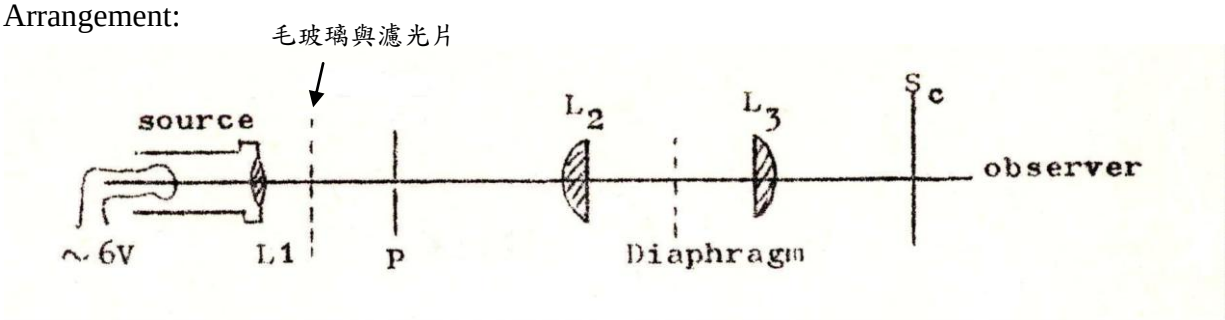

Procedure:

1. Arrange the apparatus as above. Set all of them on the same level.
2. Adjust the distance between source S and condenser L_1 to condense the light on the pinhole P.
3. Adjust the collimator L_2 to collimate a parallel beam. A plane mirror can be used.
4. Put one of the given five diaphragms between the collimator L_2 and the tested lens L_3.
5. Observe the good image on the screen S_c and record the focal length *f*.
6. Measure the radius of the diaphragm *h*, and draw a curve of *h-f*.
7. Calculate the longitudinal spherical aberration(L.S.A.)
8. Turn the tested lens by 180°, then repeat the procedure from (3) to (7).

B. Chromate aberration

Object:

Measure the chromatic aberration of a single lens.

Theory:

Remain to students.

Procedure:

1. As in part A, collimate a parallel beam.
2. Put one of the given four filters before the pinhole p.
3. Measure the focal length of the tested lens for each filters.
4. The transmission for each filter is given by
   a) red .....6080 angstrom.....468 03 (filter No.)
   b) yellow .....5780 angstrom.....468 30 (filter No.)
   c) green.....5460 angstrom.....468 31 (filter No.)
   d) violet .....4650 angstrom.....468 13 (filter No.)

C. Coma, astigmatism, and※distortion

Object:

1. Study mathematically and experimentally the magnitude of aberrations in lenses.
2. This experiment is a qualitative demonstration of the three monochromatic off-axis aberrations of third theory: coma, distortion, and astigmatism.

Theory:

1. Coma: The aberration known as coma affects rays from points not on the axis of the lens. It is similar to spherical aberration (which relates to points on the lens axis) in that both arise from the failure of the lens to image central rays and rays through outer zones of the lens at the same point object is imaged not as a circle but as a comet-shaped figure. Figure 3-1 illustrates this lens defect for a single object point infinitely distant and off the axis.

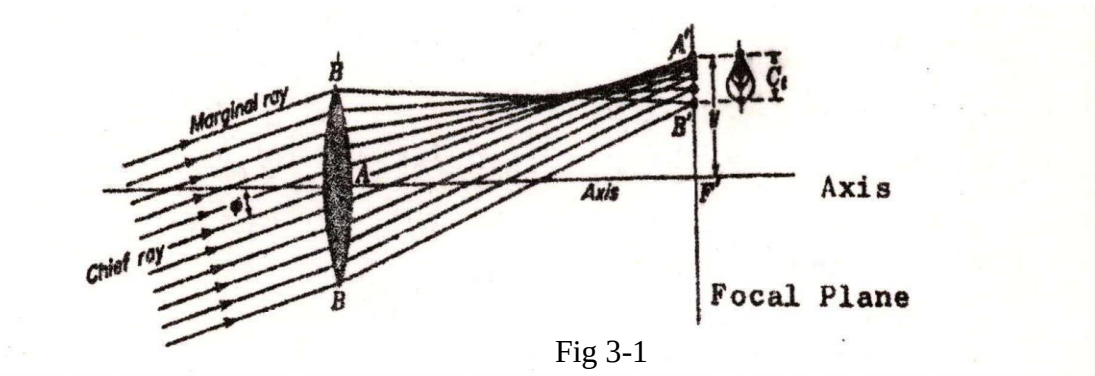

Fig 3-1

2. Astigmatism: Astigmatism, like coma, affects the image formed by a lens of points not on the lens axis. The difference, however is that coma results in spreading out the image of a point over a plane perpendicular to the lens axis, while astigmatism spreads the image in a direction along the axis, the effect is shown in Fig. 3-2. (It is assumed that astigmatism is

the only aberration present.) Considering the rays from a point object Q, all the rays in the fan contained in the vertical or tangential plane cross at T, while the fan of rays in the horizontal or sagittal plane crossed at S. The tangential and sagittal planes intersect the lens in RS and JK, respectively. Ray in the planes are chosen because they locate the two focal lines T and S formed by all rays going through the lens. There are perpendicular to their respectively tangential and sagittal planes. At L the image is approximately disk-shaped, and constitutes the circle of least confusion for this case. If one considers the images of all points in the object plane, the locus of the primary images of these point is a surface of revolution about the lens axis, designated as the primary image surface. Similarly, the secondary image surface is the focus of the secondary images. The surface of the best focus is the locus of the circle of least confusion. All of these surfaces are tangent to one another at the axis of the lens. In general, the surfaces of the best focus is not a plane, but a curved surface, and this aberration is known as curvature of field.

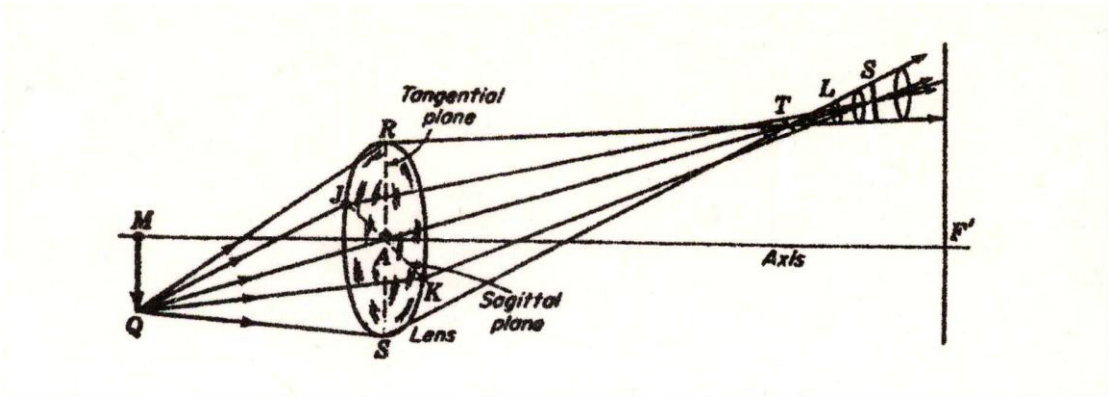

Fig 3-2

3. Distortion: Distortion is an aberration arising not from a lack of sharpness of the image but from a variation of magnification with axial distance, the outer parts of the field are dis-proportionally magnified. This effect is referred to as “pincushion” distortion. If the magnification decreases with increasing axial distance, the opposite effect known as “barrel” distortion.

Procedure:

1. Coma: Use the point source and collimator lens oriented for minimum spherical aberration to obtain a parallel beam of monochromatic light along the optical bench. Mount a double-convex lens on the lens mount so that it is fully illuminated and focus the beam on the observing screen. Rotate the lens slowly to an angle of perhaps 20°. Observe the image carefully to see the coma. (If the lens is not equi-convex, rotate it 180° and repeat the experiment.) The coma observed will be mixed with spherical aberration, and at large angles, it will also be affected by astigmatism. Place the coma

diaphragm over the lens with holes 1 & 1’ (in a vertical lines) and observe the out of focus image with the lens on axis again. Once more rotate the lens slowly about 10° and watch the changing dot pattern. Return the lens to the axial position and focus the pattern to the smallest possible spot. Without changing the image distance, rotate the lens to the 10° position and cover all the holes except 1 & 1’. Do the two transmitted pencils fall on one sharp spot on screen, or, if not, how far must the screen be move to bring the spot together? (Note the position reading of the screen.) Next, cover all but holes 2 & 2’, and repeat. Try 3 & 3’ and 4 & 4’.

2. [Not Aavailable]Astigmatism: With no diaphragm rotate the double-convex lens (with light) to an angle of 20° or 30°. Adjust the position of the screen to find the tangential and sagittal focal lines.
3. Distortion: Both barrel and pincushion distortion are observed if a short focus positive or negative lens is used to view a sheet of graph paper. Hold a strongly convergent plane-convex lens within the focal distance and the eyes far enough away from the lens to see the image. Then hold a strongly divergent plane-concave lens close to the paper and to see the image of the graph paper. (Describe the result.)

Questions:

(1) How to collimate a parallel beam?

(2) Is there any difference when a ray passed through from the plane side and from the curvature side of a plano-convex lens? Explain.

(3) Discuss the results of each aberration.

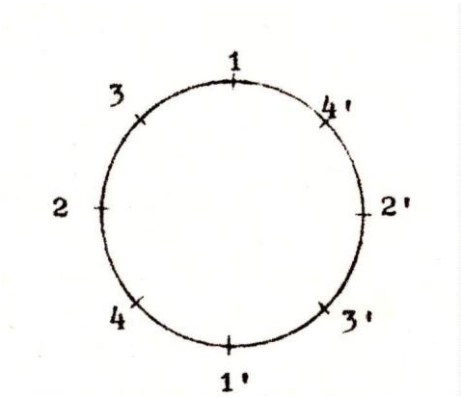

Coma Diaphragm


2007 1 30