實驗七: 齊曼(Zeeman)效應

Determination of (e/m) by measuring the splitting of a spectral line in a magnetic field.

Spectral determination of the specific elementary charge e/m by measuring the splitting of the red cadmium line $\lambda_0 = 643.8nm$ in a magnetic field during transversal observation ("normal Zeeman effect").

The red spectral line of cadmium with $\lambda_0 = 643.8nm$ splits into several components in the magnetic field B: if observing in the direction of the field, it splits into two, if observing perpendicular to the field – as in the described experiment – it splits into three components. The red line corresponds to the transition of one of two electrons of the 5th shell from a high level with the angular momentum L=2 into a level with L=1. The total spin is zero in both levels, therefore the total angular momentum J is a pure orbital angular momentum. It has the value:

$$J = \hbar\sqrt{L(L+1)}\,.$$

The magnetic moment linked to it is

$$\vec{\mu} = -\frac{e}{2m}\vec{J} \qquad (1)$$

(m = Electron mass, e = Electron charge).
The energy gain of the magnetic dipoles in the outer magnetic field $\vec{B}$ ($\vec{B}$ points in the Z-direction: $\vec{B}$ =(0,0,B)) is

$$W_{pot} = -\vec{\mu}\cdot\vec{B} = -\mu_z B\,.$$

Because of the orientation quantizing of the z component of $\vec{J}$:

$$J_z = M\hbar$$
$$M = +L, L-1, \ldots -L$$

M: Magnetic quantum number
The energy level belonging to a definite L divides itself into 2L+1 level, whose distance is

$$\Delta E = \frac{e}{2m}B\hbar\,.$$

By taking the selecting rule $\Delta M = 0, \pm 1$ into consideration, we get three spectral lines; one line which is not shifted ($\Delta M = 0$) and two spectral lines which are shifted ($\Delta M = 0$) by

$$\Delta\nu = \frac{\Delta E}{\hbar} = \pm\frac{eB}{4\pi m} \qquad (2)$$

(see not at the end).
In the experiment the wavelength displacement is measured, and then $\Delta\nu$ calculated and, after determining B, the value of $\frac{e}{m}$ is calculated according to equation (2).

The wavelength displacement is determined with the Lummer-Gehrke plate (high resolution). In this way, spectral lines are always observed in several interference levels at the same time. Instead of one line, a whole system of lines appears. This gets displaced when the wavelength λ is changed: a displacement which is exactly as large as the distance of Δs of two neighboring interference levels is caused by a change of wavelength $\Delta\lambda$:

$$\Delta\lambda = \frac{\lambda^2}{2d}\cdot\frac{\sqrt{n^2-1}}{n^2-1-n\cdot\lambda\cdot\frac{dn}{d\lambda}} \approx \frac{\lambda^2}{2d}\cdot\frac{\sqrt{n^2-1}}{n^2-1} \qquad (3)$$

n: Refractive index of the Lummer-Gehrke plate
d: Thickness of the Lummer-Gehrke plate.
If the change in λ is smaller (e.g. $d\lambda$), the corresponding displacement also decreases:

$$d\lambda = \frac{ds}{\Delta s}\Delta\lambda$$

or with (3)

$$d\lambda = \frac{ds}{\Delta s}\cdot\frac{\lambda^2}{2d}\cdot\frac{\sqrt{n^2-1}}{n^2-1} \qquad (4)$$

Δs and ds are determined with the help of the graticule eyepiece (a) of the observation telescope. The values for Δs and ds can be read on the micrometer clock (b) (compare Fig. 2).

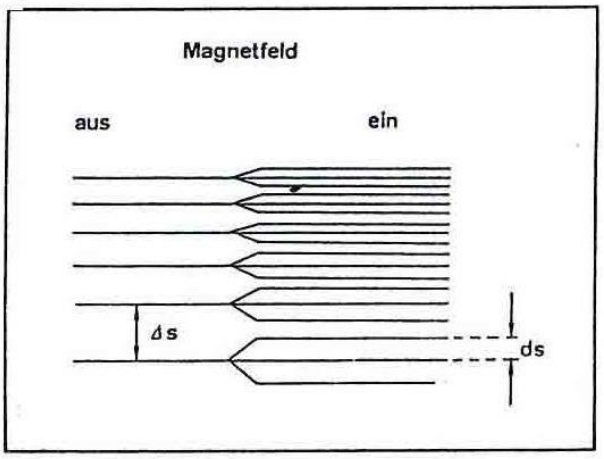

Fig. 1: Interference pattern of the "normal" Zeeman effect
Δs = Distance between two interference lines (without a magnetic field)
ds: Distance of the split line from the middle interference line

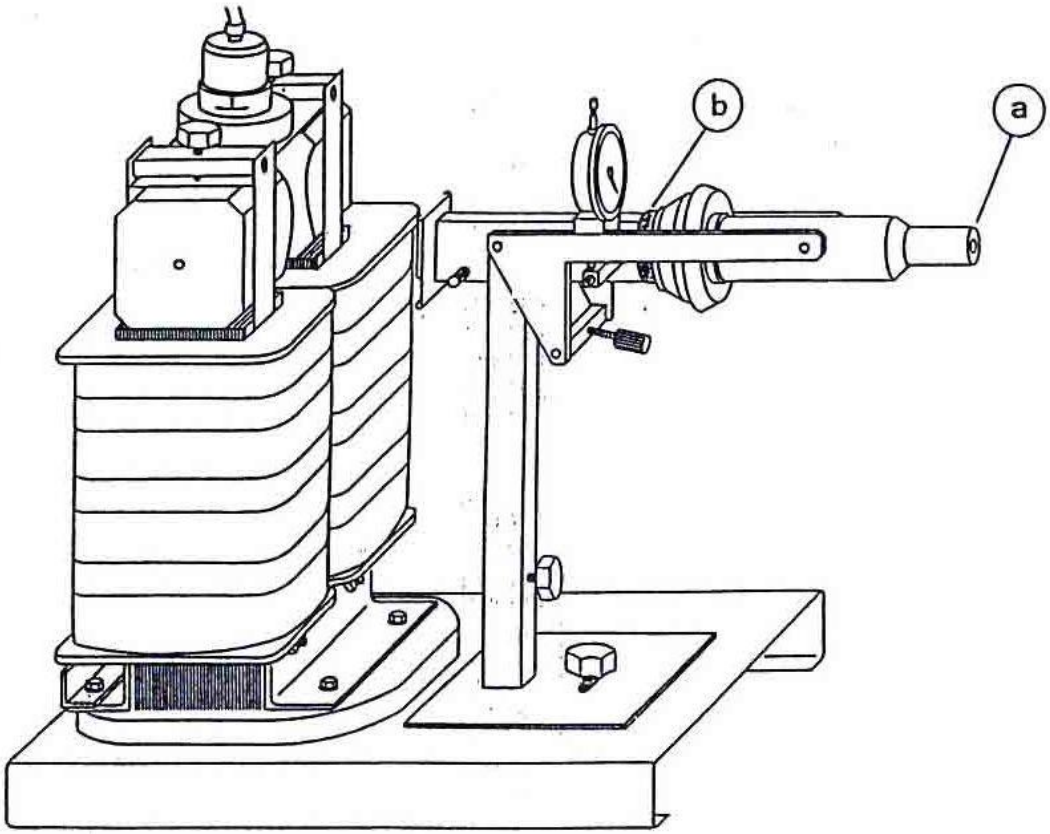

Fig 2. Experiment setup for the Zeeman effect

Apparatus:

1	Zeeman effect, optical system for observing
1	Lummer-Gehrke plate
1	Cadmium lamp with holder
1	Universal choke 220V
1	Zeeman effect, electromagnet
1	Power supply uint, regulated 12V/20A
1	Interchangeable scale demonstrating meter, basic unit
1	Measuring module Tesla
1	Power supply unit, plug-in, 220V
1	Tangential field probe
1	Calibrating magnet
1	Measuring instrument D (220V)
1	Shunt, 30A
1	Connecting lead, red, 50cm
1	Connecting lead, red, 1m
1	Connecting lead, blue, 50cm
1	Connecting lead, red, 25cm
1	Connecting lead, blue, 25cm

Setting up:

Setup as shown in Fig. 2. Attach the electromagnet with hexagon head cap screws on the optical system base plate so that the electrical connections point away from the optical system.
Screw the column of the optical system on the base plate at large distance from the magnet. Put in the pole shoes and the holder of the cadmium lamp; the smooth ends of the pole shoes should be flush with the outer flanks of the U-core. The opening of the cadmium lamp holder should point in the direction of electrical connection of the electromagnet.
Tighten the capstan-head screws on the spectral lamp holder and on the pole shoes. Turm the lamp so that it points towards the side of the electrical connections and diagonally to the direction of the field.
Connect the cadmium lamp on the universal choke and turn it on – it takes about 5 minutes until the red cadmium line is emitted sufficiently strongly.

Adjusting the optical system:
Remove the covering cap and place the Lummer-Gehrke plate horizontally onto the window where light enters; place the red filter, which has a convex lens flued to it, in front of the incident opening of the covering cap and replace the covering cap.Place the polarization filter onto the telescope and put the rubber blind onto the holder of the Lummer-Gehrke plate and between them place the enclosed rings made out of foam material to completely block outside light.
Preadjustment with the eyepiece removed: **a.** take the whole optical system and shift it in a right-left direction until a fine straight pattern can be seen on the Lummer-Gehrke plate. **b.** adjust the height of the Lummer-Gehrke plate until it reaches the cadmium lamp (the screw to do this is at the base of the column of the optical system). **c.** set the position of the incident window relative to the Lummer-Gehrke plate; to do this, lossen the 3 knurled screws on the covering cap, either lift or lower these and then tighten the knurled screws again.
Repeat steps a. and c. until a bright and clear line pattern can be seen above and underneath the Lummer-Gehrke plate. Put the eyepiece back in, and by moving the tube of the eyepiece, focus the spectral line. Focus the reticule by

turning the eyepiece.
Put the micrometer gauge with the probe tip facing downwards, into the holder left of the Lummer-Gehrke plate.

Note: Before turning on the magnetic current, make sure that the pole shoes of the magnet are firmly screwed on. When the field is turned on, do not go anywhere near the spectral lamp with ferromagnetic objects. Treat the Lummer-Gehrke plate very carefully so that the smooth surface of 1/100 µm remains intact.

In this experiment, we observe the spectral lines transverse to the magnetic field and with a polarization filter.

Carrying out the experiment:

Calibrating the magnetic flux density as a function of the magnetic current:

Turn the cadmium lamp off and putt it out of its holder. Calbrate the tangential field probe with the connected interchangeable scale demonstration meter and calibrating magnet.
Connect the electromagnet to the stabilized power supply unit as shown in Fig.3. and turn on the power supply unit.

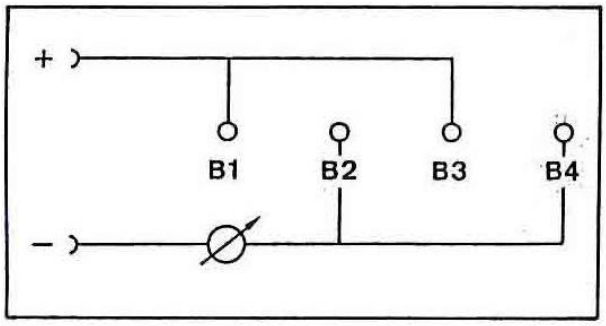

Fig. 3: Connection of the electromagnet

With the tangential field probe in the position of the cadmium lamp, measure pairs of I and B (compare table 1).
Turn off the coil current. Put the cadmium lamp back in its holder and turn it on; wait for approx. 5 minutes until the red Cd-line is emitted in sufficient quantities.
Measuring out the line pattern without a magnetic field (Δs):
Make the cross in the eyepiece and the line which needs to be measured coincide and set the micrometer clockwork to zero. By turning the screw at the bottom of the clockwork, make the cross in the eyepiece coincide with the next line and then read the distance Δs on the micrometer clockwork.

Note: The middle lines are the best ones to measure (there is a large distance between the lines when the focus is highly sharp).

Measuring the Zeeman split (ds = distance between two neighboring lines of a triplet):
With the magnetic fields (I=20A) turned on, watch the splitting of the line into three components. Filter out the middle line with the polarization filter, whose position in independent of the magnetic field. To do this turn the polarization filter.
Because the system of lines generated by the Lummer-Gehrke plate is not equidistant (Fig.4), ds and Δs must absolutely be measured on the same triplet.
Make the cross in the eyepiece coincide with the lower component of the triplet, set the micrometer clockwork to zero and measure the splitting $2 \cdot ds$ which is dependent on the magnetic field.

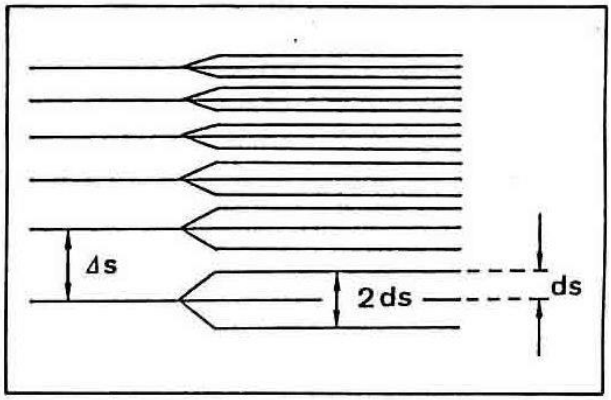

Fig. 4: Measuring the Zeeman splitting

Finally, slowly reduce the current and observe the dependence of the splitting on the magnetic flux density.

Note: For calculations, only the ratio $\frac{ds}{\Delta s}$ is needed. Therefore the conversion factor of the displacement ds and Δs for the corresponding angles does not need to be known.

Measuring example:

I=20A; B=0.77T
Δs =0.15mm=Distance between two interference lines
ds =0.04mm= Distance between two lines within a triplet

Table 1

$\frac{I}{A}$	$\frac{B}{T}$
2.5	0.1
5.0	0.195
7.5	0.3
10.0	0.395
12.5	0.505
15.0	0.605
17.5	0.7
20.0	0.77

Note: The magnetic flux density is dependent upon various experimental conditions, for example, the distance between the pole shoes.

Evaluation and results:

The splitting of spectral lines increases with magnetic flux density. According to relationship (2):

$$\frac{e}{m} = \frac{4\pi}{B} d\nu .$$

For the value of the frequency change:

$$|d\nu| = \frac{c}{\lambda^2} d\lambda . \qquad (5)$$

Taking (4) into consideration, we derive the following equation from (5)

$$\frac{e}{m} = \frac{4\pi}{B} \frac{c}{\lambda^2} \frac{ds}{\Delta s} \frac{\lambda^2 \sqrt{n^2 - 1}}{2d\left(n^2 - 1\right)}$$

$$= \frac{4\pi c}{B} \frac{ds}{\Delta s} \frac{\sqrt{n^2 - 1}}{2d\left(n^2 - 1\right)}$$

$$= \frac{4\pi \cdot 3 \cdot 10^8 m/s}{0.77T} \cdot 0.26 \cdot$$

$$\frac{\sqrt{1.4567^2 - 1}}{2 \cdot 4.04 \cdot 10^{-3} m\left(1.4567^2 - 1\right)}$$

$$= 1.48 \cdot 10^{11} \frac{m^2}{Vs^2} = 1.48 \cdot 10^{11} \frac{As}{kg}$$

(n = Refraction index of the Lummer-Gehrke plate=1.4567; d=4.04mm)

Note:
Decisive for the aplitting into only three spectral lines is the condition that both levels split equidistantly. This is only the case when the Lande factor g, which as the proportionality factor between $\vec{J}$ and $\vec{\mu}$, is the same for both levels. In our case, g =1 (pure orbital momentum). In general, when the total spin S is not zero, g has different values for different terms. The splitting of the spectral lines in the magnetic field then has a much more complicated form ("anomalous Zeeman effect"). This means that the classical "anomalous" Zeeman effect (splitting into more than three lines; $S \neq 0$) is normal in quantum mechanics.
The normal Zeeman effect was postulated by Lorentz in 1895 on the basis of the classical notion of the electron as a rotating charge and was proved experimentally one year later by his student Zeeman. It was impossible to apply the Lorentz electron theory to the anomalous Zeeman effect. This led Goudsmit and Uhlenbech to form the hypothesis of electron spin in 1925.

Table value: $\left(\frac{e}{m}\right)_{theor} = 1.76 \cdot 10^{11} \frac{As}{kg}$

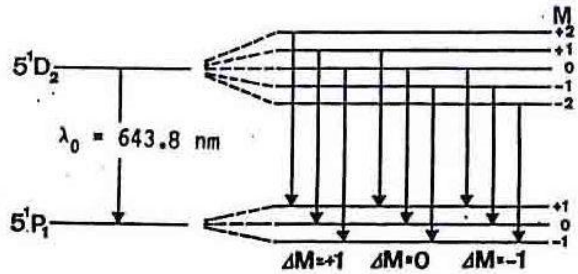

Fig. 5:
Term diagram for the red Cd-line
left: without magnetic field
right: with magnetic field

λ_0 : transition $5^1D_2 \rightarrow 5^1P_1$
$\Delta M = \pm 1$: line shifted by $d\nu = dE/h$
$\Delta M = 0$: unshifte